2/2-Way Solenoid Valve - Type EGV Series 200

Price group	53	Function “A” normally closed	low noise and impact-free closing, for neutral, gaseous or fluids	Brass

Version		DN	Kv-value water [m³/h]	G	PN	Possible type of current	Sealing material	Type	Order number	Price
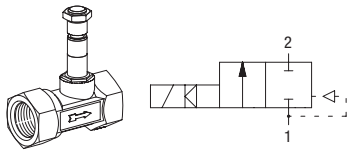	Valve without solenoid coils Permitted operating pressure 0.3 bar up to value according to table below.	10	2	G 3/8	16/8	AC/DC	NBR	EGV-211-A79-3/8BN-00	613041	o. r.
		10	2	G 3/8	16/8	AC/DC	EPDM	EGV-211-A79-3/8PN-00	613043	o. r.
		10	2	G 3/8	16/8	AC/DC	FKM	EGV-211-A79-3/8FN-00	613045	o. r.
		12	2.2	G 1/2	16/8	AC/DC	NBR	EGV-211-A79-1/2BN-00	613051	o. r.
		12	2.2	G 1/2	16/8	AC/DC	EPDM	EGV-211-A79-1/2PN-00	613053	o. r.
		12	2.2	G 1/2	16/8	AC/DC	FKM	EGV-211-A79-1/2FN-00	613055	o. r.

Illustration

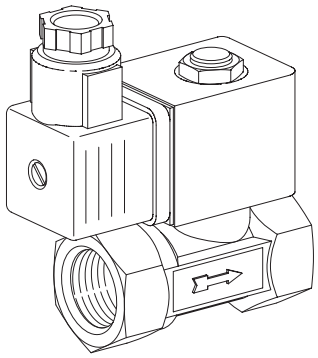

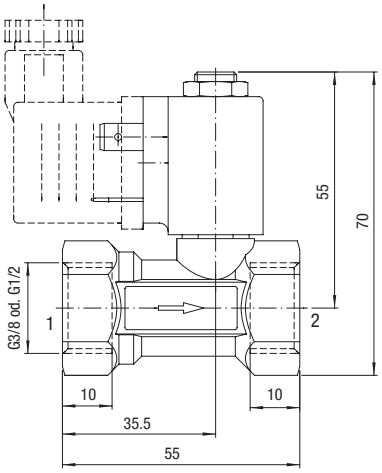

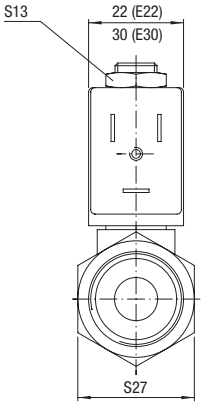

Cable sockets adaptable with solenoid coils E22 by 2 x 180°, with E30 by 4 x 90° repositionable. Both solenoid coilss 360° rotatable.

Function

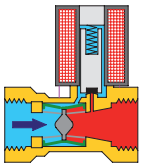

In 0-position - magnetic system not under current - its seat is closed. Pressure thus builds up in the control chamber, which due to the larger effective membrane surface holds the membrane in “closed” position.

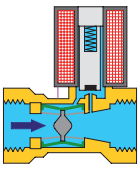

In overrideal position - magnetic system under current - its seat is open, the control chamber discharged and the membrane is held by the medium in “open” position. A minimum pressure difference is required for this.

Options

increases resistance to corrosion and replaces stainless steel valves cost-effectively for many medium Type EGV-211Q-...

Permitted Operating Pressure OP

DN	type	PN	Combinable solenoid coils				Permitted Operating Pressure OP [bar] at ambient temperature +60 °C														
			type	Nominal current P_{20}			AC 50 Hz 90 %U_N Medium temperature			AC 60 Hz 90 %U_N Medium temperature			DC 90 %U_N Medium temperature			DC 90 %U_N Medium temperature			DC 100 %U_N Medium temperature		
				AC 50 Hz [VA]	AC 60 Hz [VA]	DC [W]	60 °C	90 °C	130 °C	60 °C	90 °C	130 °C	60 °C	90 °C	130 °C	60 °C	90 °C	130 °C	60 °C	90 °C	130 °C
10 and 12	EGV-211-A..	16/8	E22...L.	3.5	on req.	2.5	16	13	12	16	13	on req.	15	10	9	8	6	4	9	8	7
			E22...M.	5.5	5	5	16	16	16	16	16	16	16	16	16	16	16	16	16	16	16
			E22...H.	-	-	8	-	-	-	-	-	-	16	16	16	16	16	16	16	16	16
			E30...P.	12	10.5	8	16	16	16	16	16	16	16	16	16	16	16	16	16	16	16